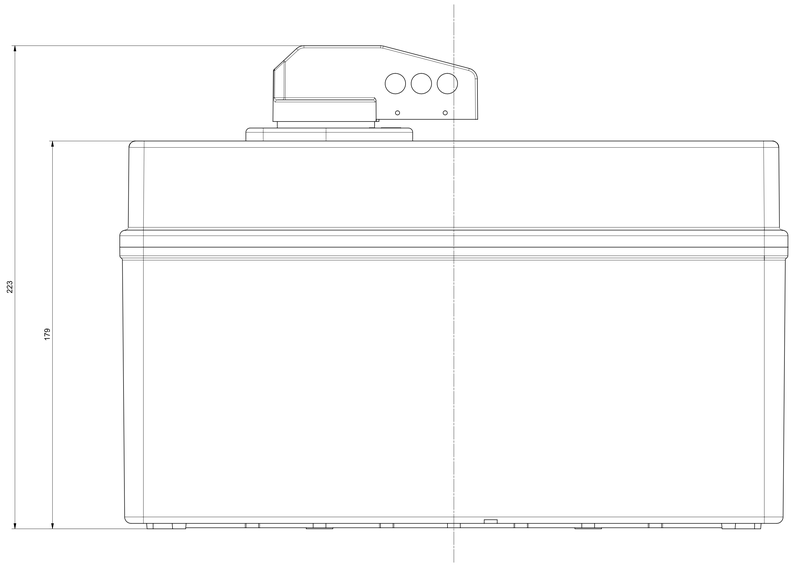

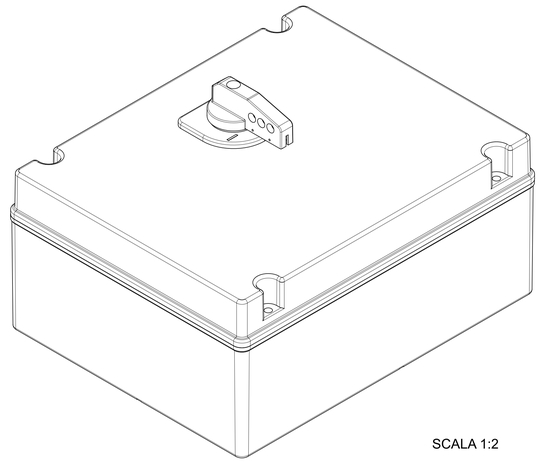

SCALA 1:2

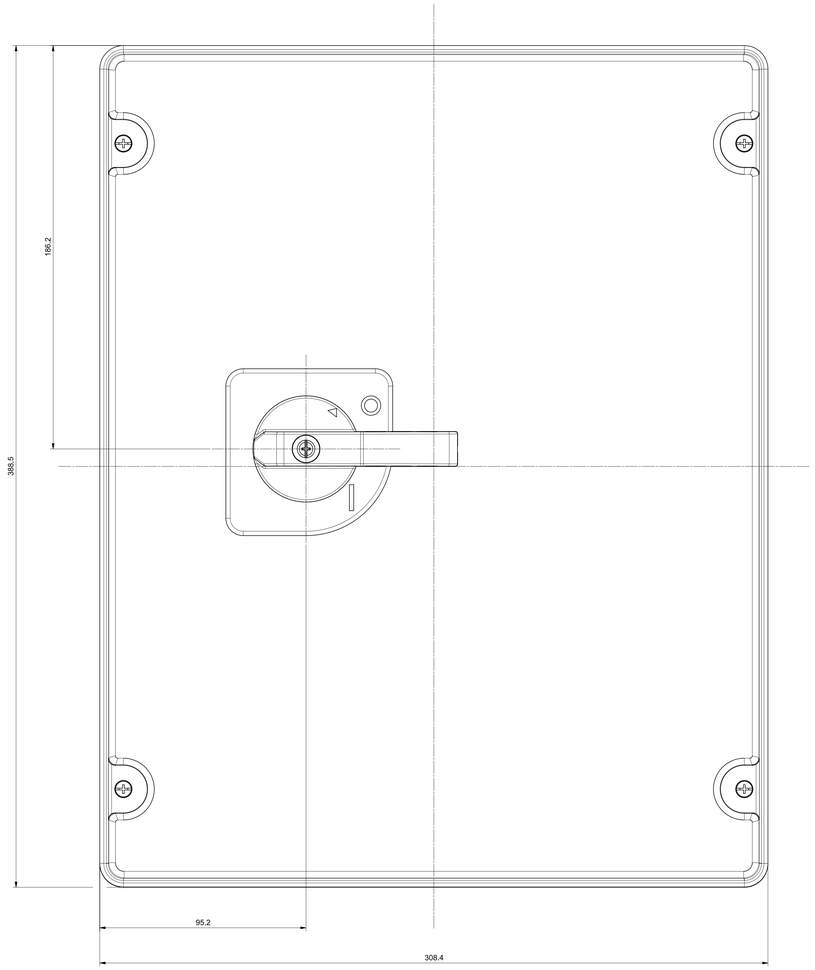

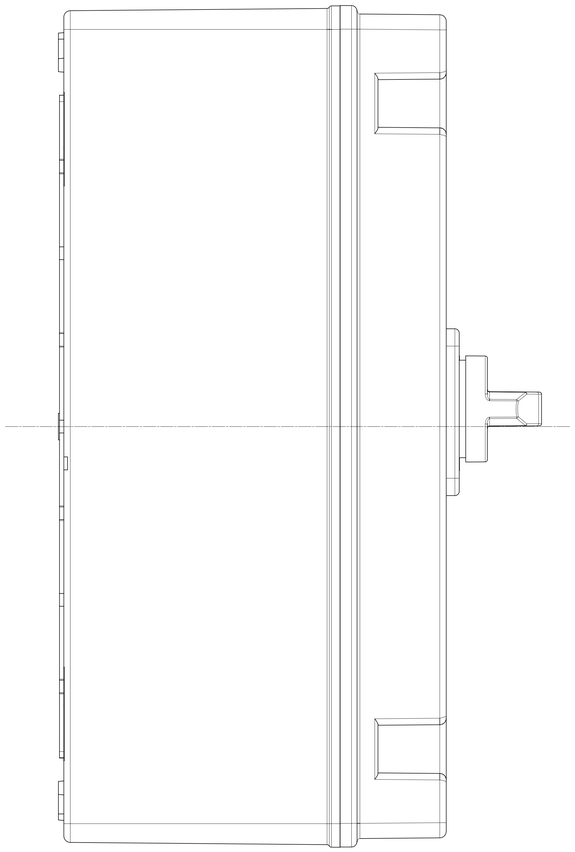

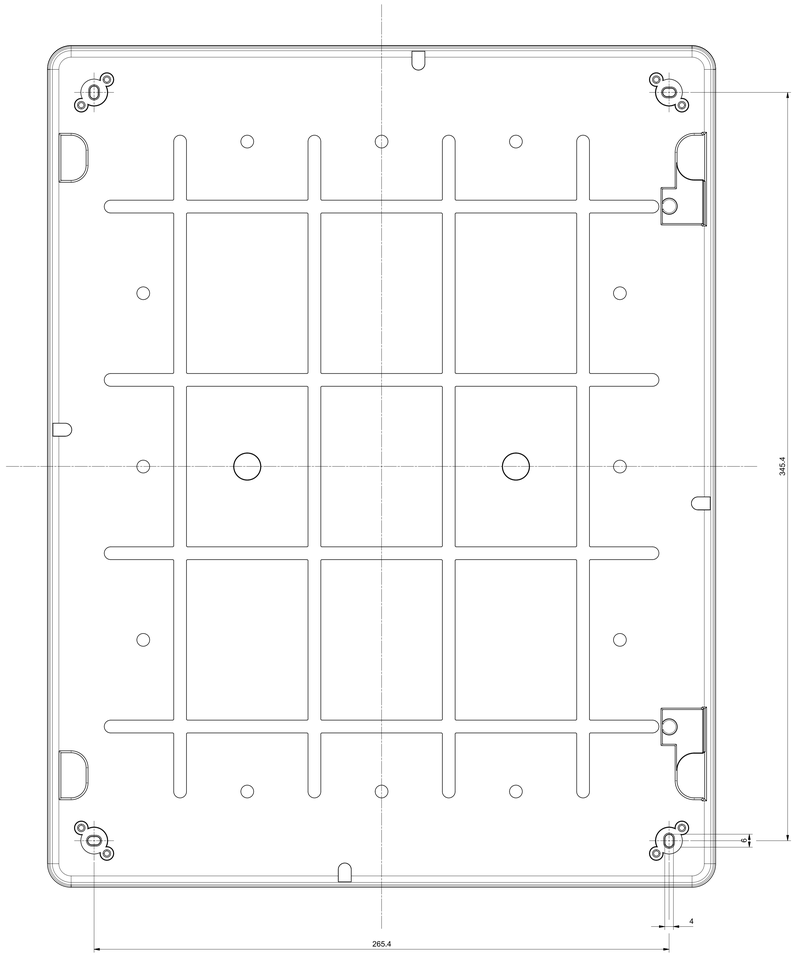

At the end of the law, we reserve the ownership of this design may not be copied and transfer it to third parties or competitors	Format: A0	Scale 1:1	Mould N°			Drawn	SCAME
	Tolerances for linear and angular dimensions without indication of specific tolerances: JS13 / UNI 286-1:2010					Date	
						Approved	
SCAME S.p.A. PARRE - (Bergamo)	DESCRIPTION					CODE	Sheet 1 / 1
	ISOLATOR 63-80A 3P+T C/FUSIBILI BS INVOLUCRO TERMOPLASTICO					4005694	