TECHNICAL DATA ADVANCE_METAL_SERIES
RATED VOLTAGE (V) Vn = 380-440
RATED CURRENT (A) In = 400
RATED FREQUENCY (Hz) fn = 50-60
IP DEGREE PROTECTION IP65

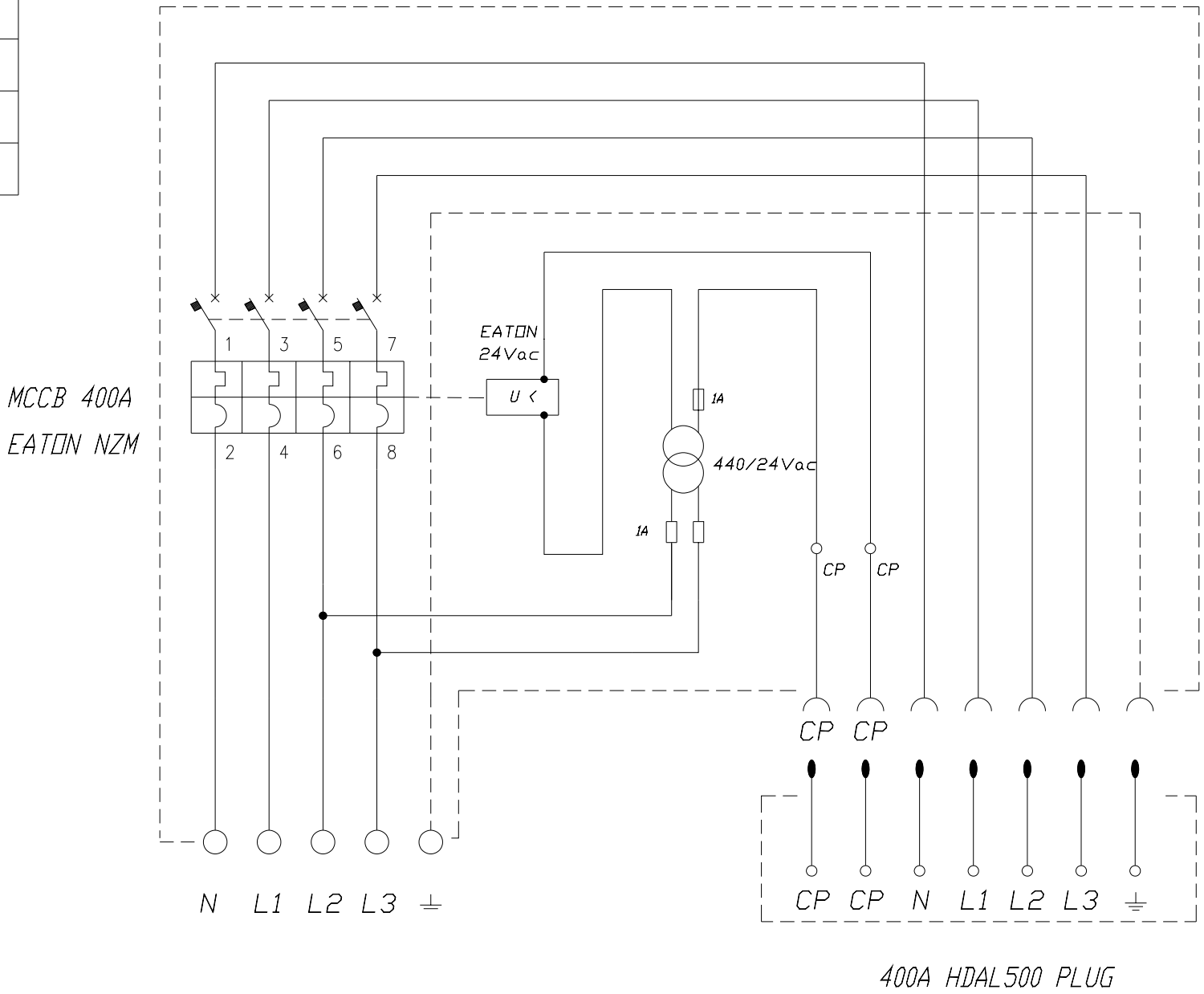

REV.	VERSION	DATE	SIGNATURE		
				DATE	13/06/2022
				DISEG.	T.Chigioni
				VISTO	F.Verzeroli
				APPR.	F.Verzeroli

SCAME
PARRE - (Bergamo)

For legal terms we reserve the property of this drawing with interdiction of reproduction and disclosing to third parties or to competitors

MP50000_EN

899.IN40087M

SHEET 1 OF 2
NEXT 2